3632-3732 HBF,RV TYPE 3

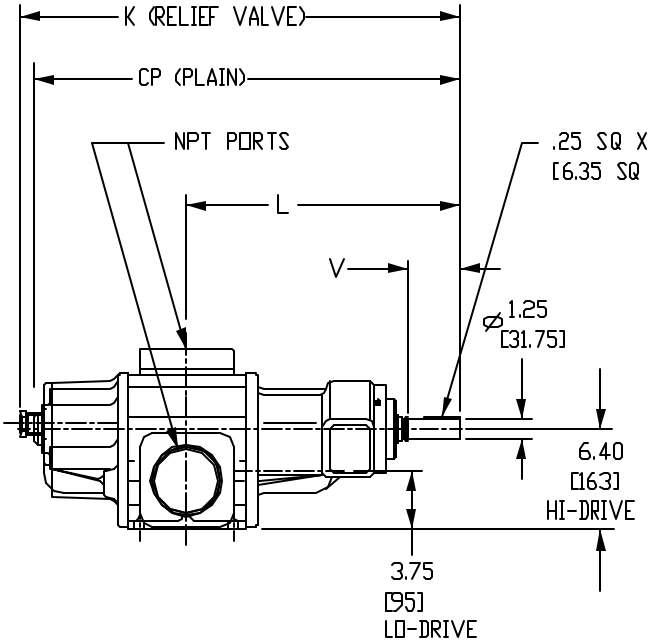

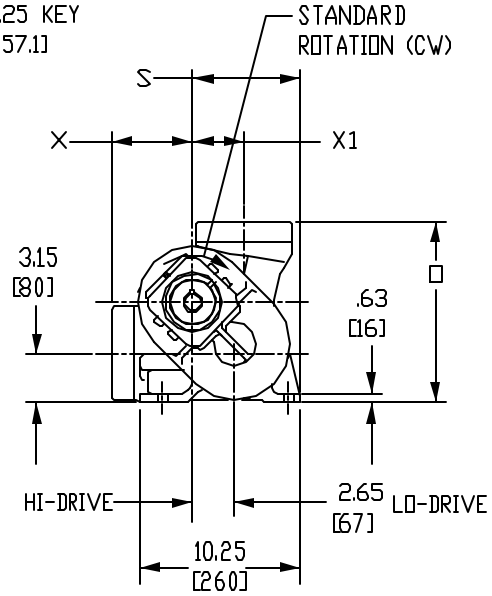

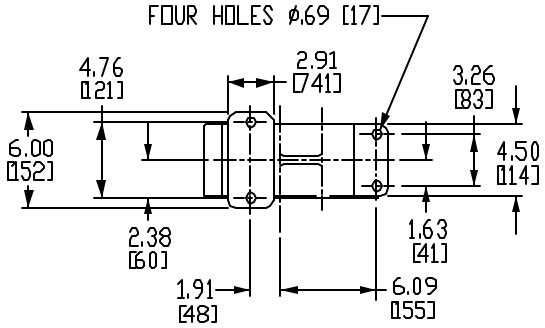

PROJECTION

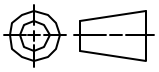

DO NOT SCALE
DIMS IN [INCHES [MM]

PUMP	CP	K	L	D	PORTS	S	V	X	X1
3632 & 3732 HBF	23.67 [601]	24.58 [624]	15.44 [392]	11.31 [287]	3" FLANGED	6.85 [174]	3.27 [83]	4.91 [125]	3.25 [83]
3632 & 3732 HBFRV									